Users Manual

Version 3.3

COMPACT STOKER

CPI 12

Controller type TH2006

Nørrevangen 7 • DK- 9631 Gedsted • Tlf. 98645222
Mail: twinheat@twinheat.dk • Web: www.twinheat.dk

Instructions for TWIN HEAT Compact stoker type Cpi 12

Year:

Prod. No.:

Serial:

TWIN HEAT Compact stoker type Cpi 12 has been tested and approved according to DS/EN303-5:2012 by "Danish Technological Institute"

"The Clean Air Act 1993 and Smoke Control Areas"

Under the Clean Air Act local authorities may declare the whole or part of the district of the authority to be a smoke control area. It is an offence to emit smoke from a chimney of a building, from a furnace or from any fixed boiler if located in a designated smoke control area. It is also an offence to acquire an "unauthorised fuel" for use within a smoke control area, unless it is used in an "exempt" appliance ("exempted" from the controls which generally apply in the smoke control area).
The Secretary of State for Environment, Food and Rural Affairs has powers under the Act to authorise smokeless fuels or exempt appliances for use in smoke control areas in England. In Scotland and Wales this power rests with Ministers in the devolved administrations for those countries. Separate legislation, the Clean Air (Northern Ireland) Order 1981, applies in Northern Ireland. Therefore it is a requirement that fuels burnt or obtained for use in smoke control areas have been "authorised" in Regulations and that appliances used to burn solid fuel in those areas (other than "authorised" fuels) have been exempted by an Order made and signed by the Secretary of State or Minister in the devolved administrations.
Further information on the requirements of the Clean Air Act can be found here :
https://www.gov.uk/smoke-control-area-rules
Your local authority is responsible for implementing the Clean Air Act 1993 including designation and supervision of smoke control areas and you can contact them for details of Clean Air Act requirements"

"The Twinheat Cpi 12 has been recommended as suitable for use in smoke control areas when burning wood pellets with a maximum water content of 10% and wood chips with a maximum water content of 30%

Table of contents **1**
Plant drawing **2**
Section 1- The control panel **3**
1.1 The display in the control panel 3
1.2 Menu structure 4
1.3 Adjustment of temperature 4
1.4 How to choose fuel type 5
1.5 O2 regulation ore manual operation 5
1.5.1 Adjustment of Man. Fac 5
1.6 Adjustment of the fuel program “Other” 6
1.6.1 Start parameters 7
1.6.2 Operation (running) parameters 7
1.6.3 Pause 7
1.7 Parameter list 7
1.8 Calibration of lambda probe 8
1.9 Reset all 8
Section 2- Start up and normal use **9**
2.1 Filling up with fuel 9
2.2 Taking fuel forward to the burner tube 9
2.3 Lighting the fire 10
2.4 Soft start mode 10
2.5 Running mode 11
2.6 Pause mode 11
2.7 Stop 11
2.8 Bypass 12
Section 3- troubleshooting **13**
3.1 Open lid 13
3.2 Error: Hot boiler 13
3.3 Low temp. 14
3.4 Stoker stop 14
3.5 High O2 14
3.6 Lambda offs. 15
3.7 Power cut 15
3.8 Sprinkler system 15
Section 4- Maintenance **16**
4.1 Maintenance intervals 16
4.2 Maintenance of boiler 17
4.3 Maintenance of burner tube 17
4.4 Maintenance of fuel store 18
Section 5- Various types of fuel **19**
5.1 Wood pellets 19
5.2 Wood chips 20
5.3 Machine / industrial chips 21
5.4 Grains 21
Section 6- Technical information **22**
6.1 Cpi 12 22
Section 7- Diagrams **23**
7.1 Parts list burner tube 23
7.2 Parts list sprinkler 23
7.3 Parts list fuel store 24
7.4 Parts list boiler 25
7.5 Electrical diagram 400V, 3 phase 26
7.6 Electrical diagram 400V, 1 phase 27
7.7 Diagram The placing of components 28

Enclosure 1- How to mount the chain for stirrer and stirrer wings
Enclosure 2- Accessories included

Declaration of conformity

Plant drawing

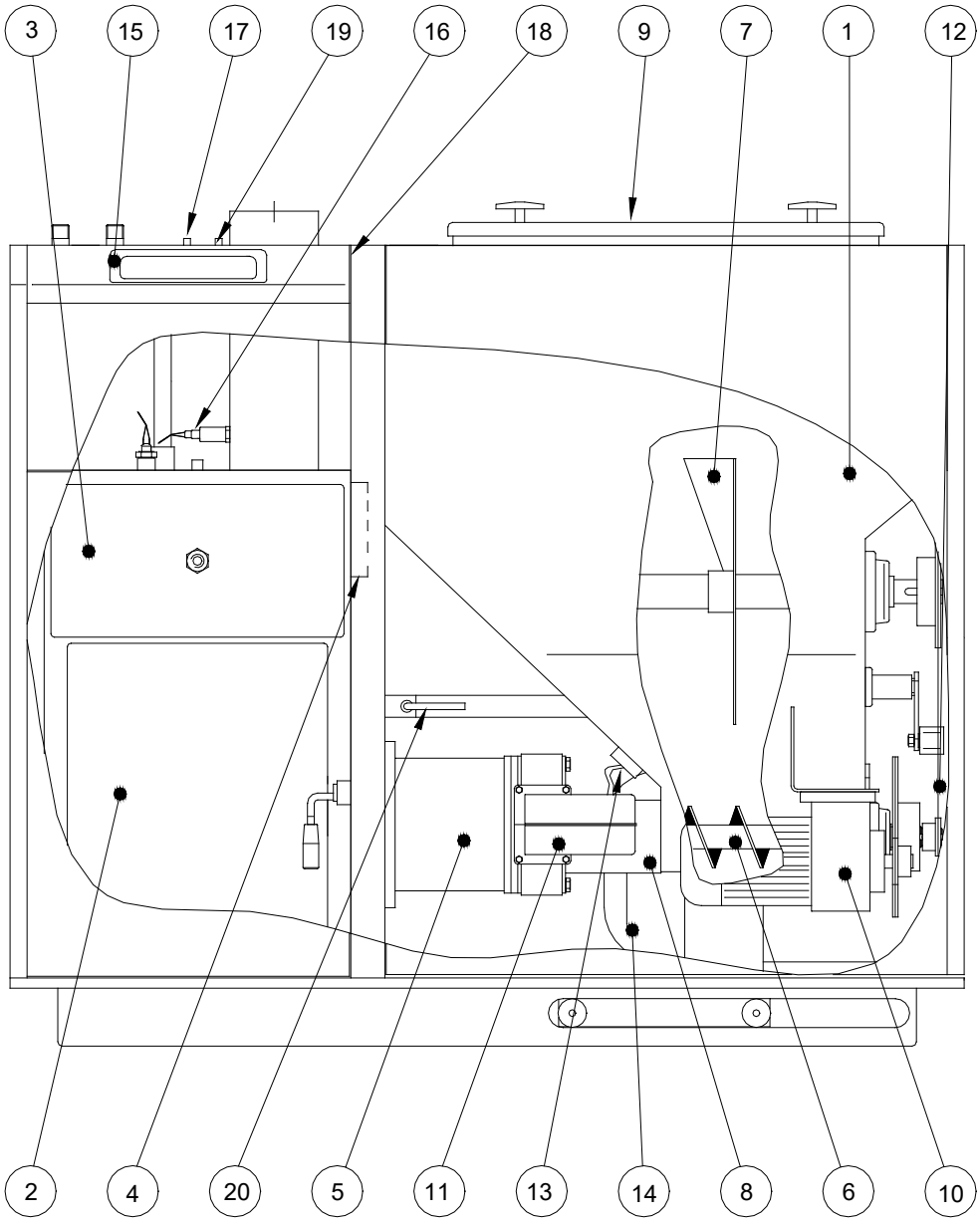

1. Fuel store
2. Boiler door
3. Cleaning door
4. Mudhole, fluebox
5. Burner tube
6. Stoker auger
7. Fuel stirrer
8. Auger channel
9. Lid, fuel store
10. Gear motor
11. Combustion fan
12. Chain connection
13. Sprinkler system (95 ºC)
14. Pressure tank for sprinkler
15. Control panel
16. Lambda probe (oxygen control)
17. Overheating thermostat
18. Safety switch
19. Flue temperature regulation, bypass
20. Handle to release fuel store

Section 1- The control panel

1.1 The display in the control panel

How to read / interpret various parameters, which can be read in the display.

Visible menu lines
Not visible menu lines

The non visible menu lines can be found by pressing ⏻

	Pellets Running 67%	← *Fuel type chosen – Mode – Boiler load in % - Errors*
Cursor →	▸Temperature : 67,8 °C	← *Actual boiler temperature*
	O2 Auto : 9,6 %	← *Actual oxygen-% (O2%)*
	O2 Wanted : 9,3 %	← *Oxygen-% which the control aims to meet.*
	Stoker puls : 1,2 S	← *Latest stoker pulse in seconds*
	Setting	➲ *To setting*

Examples:

<u>Change boiler temperature:</u>

Press ⏻ to `setting`
Press ➲ to choose `setting`
The cursor is placed by `Temp setpoint` The chosen temperature is shown. (e.g. `70°C`)
Press ➲ (notice that the cursor change appearance to ⬍)

Now the temperature can be adjusted between 70-85°C by ⏀ ⏻
Confirm the chosen temperature by pressing ➲
Leave the menu by pressing ⮌

<u>Change type of fuel :</u>

Press ⏻ to `setting`
Press ➲ to choose `setting`
Press ⏻ to `Fuel type`
The cursor is placed by `Fuel type` The chosen fuel type is shown. (e.g. `Pellets`)
Press ➲ (notice that the cursor change appearance to ⬍)

Now the type of fuel can be changed by ⏀ ⏻
Confirm the chosen fuel type by pressing ➲
Leave the menu by pressing ⮌

ERRORS : Are cancelled by pressing »START«
See section 3 regarding how to spot errors

1.2 Menu structure

The various adjustment possibilities are looked up in searching by means of the arrows at the front of the control panel

> If you want to leave the menu without making any changes, press ⊂
> Errors are cancelled by pressing »START«

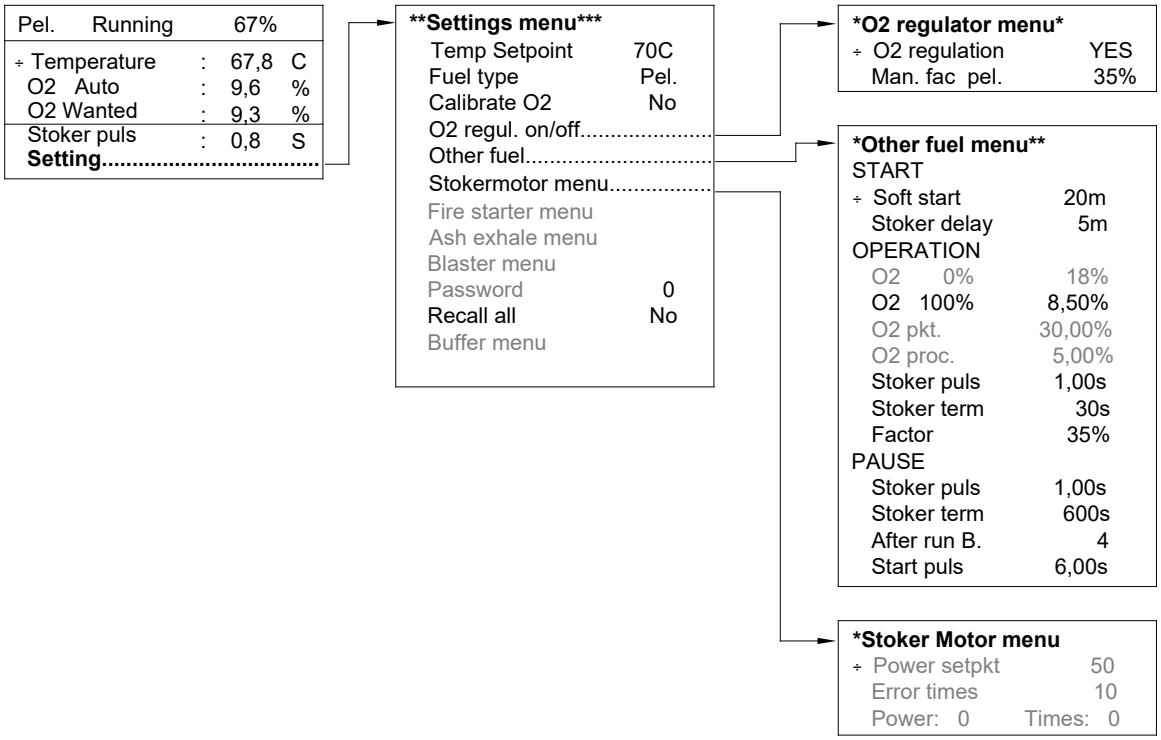

1.3 Adjustment of temperature

The temperature (boiler temperature) can be adjusted between 70 – 85°C
The temperature is from factory pre-set to 70°C.
Some situations – such as an under-dimensioned radiator system or hot water tank might make it desirable to adjust the boiler temperature higher than 70 º C

The cursor must be placed by the line `Setting`

> Press ⊃ to choose `setting`
> The adjusted temperature is shown . (e.g. `70°C`)
> Press ⊃ : The temperature can be adjusted by pressing ⌃ ⌄
> Confirm new setting by pressing ⊃
> Leave the menu by pressing ⊂

The water returning to the boiler must always be at **least 60°C**
If the above is not respected the corrosion of the steel in the boiler will increase and the life expectations will be reduced.

1.4 How to choose fuel type

In the `settings menu` under `fuel type` you can choose between 4 programs
There are 3 fixed programs for respectively **Wood pellets, Grains or Wood chips**.
The programs are adapted to the individual type of fuel.

If you choose to use another kind of fuel than the above mentioned, you have the possibility to choose `Other` under `fuel type`. When `Other` has been chosen, parameters for this fuel must be adjusted. *(See section 1.6 Setting)*

The cursor must be placed by the line `Setting`

Press ➲ to choose `setting`
Press ⏻ to `Fuel type`
The chosen fuel type is shown. (e.g. `Pellets`)
Press ➲ Now the type of fuel can be changed by pressing ⏏ ⏻
Confirm the new setting with ➲
Leave the menu by pressing ➲

PLEASE NOTE:

Requirements when heating with grains: High flue gas temperature min. 180°C
High boiler output min. 50%
High boiler temperature min. 80°C

1.5 O2 regulation ore manual operation

Manual operation can be an advantage, if the fuel used is of bad quality or if e.g. the lambda probe goes defect

The cursor must be placed by the line `Setting`

Press ➲ to choose `setting`
Press ⏻ to `O2 regul. On/off`
Press ➲ to choose `O2 regulator menu`
Press ➲ : Now you can choose `YES` or `NO` by pressing ⏏ ⏻
(`YES` = O2 regulation `NO` = Manuel operation)
Confirm your choice by pressing ➲
Leave the menu by pressing ➲

Hereafter the `Man. Fac.` (the amount of fuel) has to be adjusted (0 – 100 %) according to the fuel chosen : pellets, grains, wood chips or other.
(See next section)

1.5.1 Adjustment of Man. Fac. (amount of fuel by manual operation)

In the `O2 regulator menu` under `Man. Fac.` You can adjust the desired amount of fuel, when using “manuel operation”

Manuel operation can be a good choice, if you use inferior fuel or if e.g. the lambda probe might be defect.

A high value = low O2 = fat combustion, where the flames have reddish / black tips
A low value = high O2 = meagre combustion where the flames have yellow / blue tips

When the boiler is running, you will read `O2 MAN` instead of `O2 Auto` in the display. The measured O2 value is shown, but not used by the controller.

If the boiler is set to `Manuel operation` when set to the fuel type `Other` please be aware, that the `Man. Fac.` value is a percentage of the stoker pulse, this means that if the stoker pulse is increased the adjusted fuel amount will increase also

The real feeding time is calculated as : Stoker pulse x boiler load x Man. Fac.

<u>Example</u>
Stoker pulse adjusted : 1,1 sec.
*Man. Fac. adjusted: 70% Reel feeding = 1,1 x 0,7 x 0,65 = **<u>0,5 second</u>***
Actual boiler load = 65%

The cursor must be placed by the line `Setting`

Press ➲ to choose `setting`
Press ⏻ to `O2 regul. On/off`
Press ➲ to choose `O2 regulator menu`
Press ⏻ to `Man. Fac.`
Press ➲ Now the amount of fuel can be adjusted between 0-100% by ⏶ ⏷
Confirm the new setting with ➲
Leave the menu by pressing ➲

1.6 Adjustment of the fuel program "Other"

In the `Settings menu` under `Other fuel` you can adjust the relevant parameters for the fuel program `Other`.

Before you begin to make a program for the alternative fuel type, you must understand the importance of the 8 parameters to adjust
(see section 1.7 Parameter list)

The cursor must be placed by the line `Setting`

Press ➲ to choose `setting`
Press ⏻ to `Other fuel`
Press ➲ to choose `Other fuel menu`

The parameters are adjusted by pressing ➲ at the current parameter, here after the value can be set by pressing ⏶ ⏷
Confirm the new setting with ➲
Leave the menu by pressing ➲

1.6.1 Start parameters

Under `Start` you can adjust 2 parameters for the start up of the boiler.

`Soft start:` Defines the period for the boiler to reach 100% load, when starting up a cold boiler.
`Stoker delay:` Defines the period where the auger is not running, when starting up a cold boiler.

1.6.2 Operation (running) parameters

Under `Operation` you can adjust 3 parameters for the running of the boiler.

O2 means Oxygen and indicates the air surplus measured in the flue.
Good fuels of dried wood, such as pellets and the like can be combusted by a small surplus of air (6 – 9 %) whereas less good fuel with higher water content or the like needs a higher surplus of air.

`O2 100%:` Defines the oxygen % (surplus air), which the controller aims for by 100 % boiler load.
`Stoker pulse`: Defines the maximum running time for the auger per period
The controller calculates the actual running time from O2 and pulse chosen.
`Stoker term`: Defines the pause time between each running period.

1.6.3 Pause

Under `Pause` you can adjust 4 parameters for the pause of the boiler

`Stoker pulse`: Defines the running time for the auger per period
`Stoker term`: Defines the pause time between each running period.
`After run blower`: Decides how long time the fan runs after each stoker pulse.
`Start puls`: Decides the time (fuel amount) the auger is running first time after pause

1.7 Parameter list

This list shows the settings from the factory.
Under ”My Settings” you can note your own adjustments in the empty squares.

	Wood pellets	Grain	Wood chips
Start			
Soft start [min]	15	30	30
Stoker delay [min]	5	20	20
Running			
O2 100% [%]	8,5	9,0	8,5
Stoker pulse [sec]	1,8	1,8	3,0
Stoker term [sec]	30	30	15
Pause			
Stoker pulse [sec]	1,0	1,0	1,5
Stoker term [sec]	600	600	600
After run blower	4	4	4
Start pulse [sec]	3	3	10
Man. Fac. [%]	35	35	35

My settings by "Other fuels"							
Date							
Fuel type							
Start							
Soft start [min]							
Stoker delay [min]							
Running							
O2 100% [%]							
Stoker pulse [sec]							
Stoker term [sec]							
Pause							
Stoker pulse [sec]							
Stoker term [sec]							
After run blower							
Start pulse [sec]							
Man. Fac. [%]							

1.8 Calibration of lambda probe

If the lambda probe over time becomes less precise, it has to be calibrated.
In normal atmospheric air the oxygen content is always app. 21 % (O_2). This can be used as point of reference for the measurement of the oxygen content. The lambda probe should be calibrated if the oxygen content in air deviates more than ± 2% from 21%. This can only be established, when the probe is exposed to **absolutely clean atmospheric air**
This is most easily done, when the boiler has been stopped for a period. There should not be any smoke at all in the combustion room or the flue pipe, when making the test.

Close the bypass damper on top of the boiler and undo the top cleaning door to the flue pipes, now the chimney will suck in "clean" air, passing by the probe.

The cursor must be placed by the line `Setting`

Press ➲ to choose `setting`
Press ⬇ to `Calibrate O2`
Press ➲ : Now you can change `No` to `YES` by pressing ⬆
Confirm the change with ➲

Now the lambda probe is calibrated (adjusted)

1.9 Reset all

If you want to reset all parameters to factory settings, chose YES.
Remember to re-calibrate the lambda probe as described above

Section 2 – Start up and normal use

2.1 Filling up with fuel

When filling up with fuel the stoker must be stopped (press "Stop") 1 to 2 minutes prior to opening the lid to the fuel store, to prevent flue gasses from being pressed back into the store. The door to the ash chamber must always be closed during the process to maintain normal draft through the chimney

Avoid emptying the fuel store before refilling. It is a good rule of thumb to fill up with fuel, when the store is ¾ empty. The lid to the store is opened by turning the two handles anti-clock-wise, one at a time. The store should never be totally filled, as that prevents the stirrer from working (See fig 2)

The stirrer system should not be used by granulated fuels, such as wood pellets, grains and the like

The chain for stirrer is not mounted from factory
(See enclosure 1)

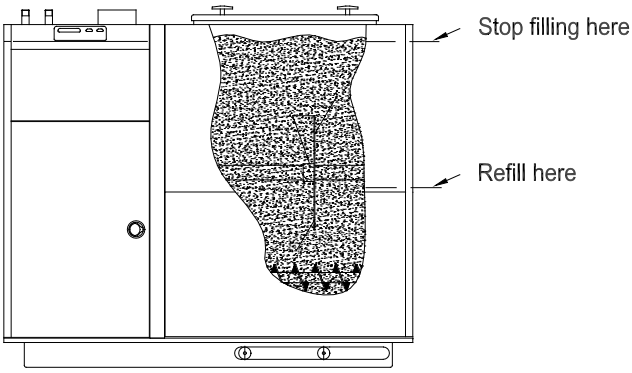

Fig. 2- Filling up with fuel

If you use a fuel, which has a tendency to "build bridges", such as wood chips or the like, then mount chain and stirrer wings on plate stirrer (*See enclosure 1)*

When you have finished filling up with fuel, the lid must be carefully closed by means of the two rotating handles, **which always must be tightly closed**. When pressing START, the boiler will continue the operation.

Please be aware that the gasket in the store lid is cleaned for fuel remains, so that the lid can close tightly

2.2 Taking fuel forward to the burner tube

If the stoker is new or if the store has been totally emptied, fuel must be taken forward to the burner tube, by the auger. When fuel has been added according to section 2.1, please press START and hold it for 1 to 2 minutes (the auger is running), then press STOP. Check the amount of fuel in the burner tube, by opening the boiler door.
(See fig. 3)

The burner tube must be ¼ to ½ filled up, depending on type of fuel. See to that the fuel is equally distributed in the lower part of the burner tube.

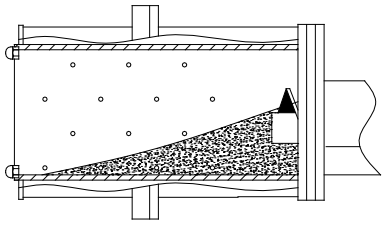
Fig. 3 - Burner tube

2.3 Lighting the fire

It is recommended to start the fire by means of a dry wooden fuel. Add e.g. 15 to 30 kg pellets or sawdust in the base of the store and then add the alternative fuel, e.g. grains on top.

When the fuel is lead to the burner tube according to section 2.2, you must light the fire by using e.g. sawdust or pellets soaked in kerosene or the like. By soaked sawdust you add 2 to 3 handful and mix it with the fuel in the burner tube, now light it by using a newspaper or the like. Close boiler door and wait for 1 to 2 minutes for the fire to catch, and then press START. The display will show the text `Soft start`

PLEASE NOTE, THAT FLAMES MIGHT REACH OUT OF BOILER IN THIS PHASE

- **ALWAYS USE GLOVES WHEN LIGHTING THE FIRE**
- **NEVER USE HIGLY FLAMMEBLE FLUIDS OR THE LIKE IN THIS PROCESS**

2.4 Soft start mode

The function of the “soft start” is to limit the boiler load when starting up a cold boiler. The boiler runs in “soft start” mode for a period of 15 minutes.

Should the combustion not have been correctly stated, when the boiler goes into the mode “Running” the result can be un-combusted fuel being pushed through the burner tube into the combustion room. **Hence you should check the stoker app. 1 hour after start**. Normally this can be done in looking at the chimney. If you do not see visible smoke then the combustion should be OK. If you however see a thick, white smoke, this is a sign, that the fire has been partly choked in the burner tube by too much fresh fuel being pushed in. Normally the combustion room too will be filled with white smoke.
If this is the case, you should carefully and slowly open the door to the combustion room (the white smoke might start burning under certain conditions). Leave the door slightly open for – say - ½ hour to allow the chimney to evacuate the smoke from the combustion room.
(see also section 3.3 Low temp / section 3.5 high O2.)

2.5 Running mode

Running mode means, that the controller constantly adjust the boiler load in the area 20 to 100 % depending on the actual heat demand. The controller will constantly aim after the temperature chosen, e.g. 70 ºC. The fan will operate in pulses, to reduce the amount of air by lower boiler loads. The higher the load the more the fan runs. By 100 % load the fan run continuously.

Large heat demand = High boiler load
Small heat demand = Low boiler load (ore pause mode)

An example of the control by the controlling unit:

1. The boiler runs stable and maintains the desired boiler temperature, say 70 ºC and the load is shown as 45% on the display.

2. Now you use hot water for dish washing, bath or the like.

3. The controller will note, that the boiler temperature drops to under 70 ºC, as the water in the boiler is cooled due to the hot water used.

4. The display will tell, that the load increases, as falling boiler temperature is noted. The boiler has to work “harder” to maintain the boiler temperature.

The LOAD data in the display is showing how hard the boiler ”works”

2.6 Pause mode

If the heat demand is relatively small and the controller has reduced the load down < 20%, the boiler goes into “Pause”. During the pause the fan is started every 10 min. and runs a little, to keep the glows in the burner tube alive.

The boiler will go into running mode when the boiler temperature has fallen some few degrees under the adjusted temperature.

Should the boiler run in pause mode for a longer period and only start a few times a day – say in summer – the flue temperature is very low, which can cause condensation of moisture in the chimney, causing soot and corrosion in the chimney. To minimise or perhaps avoid this, you should open the bypass damper totally to avoid cooling the flue too much.
(see section 2.8, bypass)

2.7 Stop

Manuel stop. : Press »STOP« and the boiler will stop.
Automatic stop. : The boiler stops automatically by errors or the like.

ERRORS : Are cancelled by pressing »START«
See section 3 Troubleshooting, regarding how to spot errors

If you want to stop the boiler for a longer period then you MUST empty the burner tube from glows to avoid a burn-back into the fuel store.
The risk of burn-back is varying from one fuel to the next. Wood chips are more likely to cause back-burn than grains or pellets. The glows might due out by the selves, but you cannot be sure, this happens

If the boiler is stopped e.g. during summer, then please open the combustion room door to prevent moisture from condensing in boiler or chimney.

2.8 Bypass (flue temperature damper)

The very effective flue cooling in the boiler means that the flue is only 120 – 130 ºC by 100% load, when leaving the flue outlet. The flue temperature is closely connected to the boiler output, means lower load = lower flue temp.

The handle on top of the boiler (the bypass) is used to adapt the flue temperature in relation to boiler output. By fully opened damper only a part of the flue is passing the flue cooler. By fully closed damper the flue is cooled to maximum (see fig 4)

If the boiler load is less than 40 – 50 %, as is the case in large parts of the year, you should open the bypass to increase flue temperature, that the flue does not condense on its way up through the chimney. If in doubt about how to place the damper, please consult your installer.
(see section 2.6, pause)

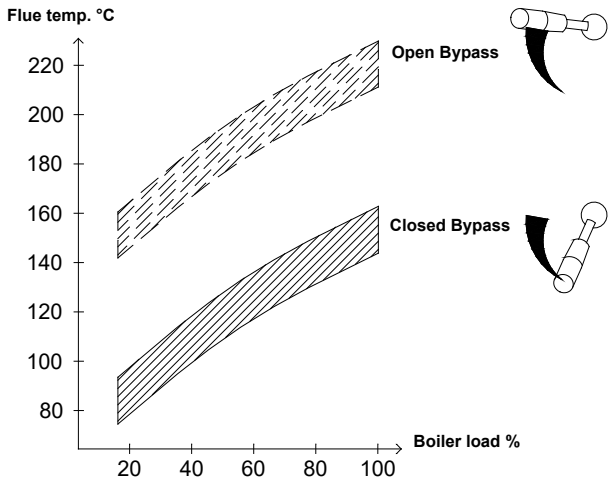

Fig. 4- Approx. flue temp. compared to boiler load

Section 3- Troubleshooting

Possible errors will appear in the upper line in the display.

```
Low temp.    (start)
▸Temperature :  33,8  °C
 O2 Auto     :  20,9  %
 O2  wanted  :   8,0  %
```

← **When the problem has been solved the message can be annulled by pressuring »START«**

Before restarting the boiler after any errors, please check, if the sprinkler has sprinkled water into the auger channel (slow moving auger, fuel is wet)
If this is the case, use the auger to transport the wet fuel into the combustion room and remove it from here (Remove fuel manually from the burner tube)

After removing the fuel please check that the sprinkler valve is closing tight again – See section 3.8 sprinkler

3.1 Open lid

- The fuel store lid is open or has not been properly closed
- The release handle for the fuel store has not been properly tightened
- The fuel store has been pulled back

3.2 Error: Hot boiler

The boiler temperature has exceeded 95 ºC and the over temperature thermostat has stopped the boiler.
The produced amount of heat could not be used in the heating system.

Causes:

- There is no real need for heat (typical for the summer).
- There might be an air pocket in the system, no water circulation.
- The circulation pump does not function.

When the boiler temperature has fallen below 80 – 85 ºC and the error has been corrected, reset over temp. thermostat and restart the boiler.
Reset the over temp. thermostat by removing the black hood on top of the boiler and gently press a match or the like into the hole. Put black hood in place again.

Should the fuel still be glowing in the burner tube, press »START« and the boiler will restart as described in section 2.4, soft start.
In case the fire should be extinguished, you must start the fire again as described in section 2.2 “Taking fuel forward to the burner tube”

3.3 Low temp.

The boiler stopped because the boiler temperature has fallen more then 15ºC below the adjusted value.
Had the boiler temperature been set on 70 ºC an error would be announced, when the temperature has been under 55 ºC for more than 10 minutes.

Causes:

- No more fuel in the fuel store
- A bridge has been built in the fuel store
- The fire has extinguished in the burner tube
- The boiler is not installed with a 3 ways mixing valve, as described in the installation manual

PLEASE NOTE : “Low temp.” is first active, when the boiler temperature has reached over 15 ºC under the set temperature, e. g. when 55 ºC has been reached by a setting of 70 ºC.
If you still see glows in the burner tube, press »START« and the boiler will restart as described in Section 2.4, soft start. In case the fire should be extinguished, the fire must be started again as described in section 2.2 “Taking fuel forward to the burner tube.”

3.4 Stoker stop

The controller is keeping track on the power consumption used by the auger.
If the auger uses more power than calculated, it is because it has jammed, ore moving too slow. The load on the auger is too high.

Causes:

- The auger is jammed by a stone or the like.
- Heavy coating in the burner tube. (see section 4.3 Maintenance of burner)
- The fuel is not suitable.
- The sprinkler has sprayed water in (see section 3.8 Sprinkler)

If you still see glows in the burner tube, press »START« and the boiler will restart as described in Section 2.4, soft start. In case the fire should be extinguished, the fire must be started again as described in section 2.2 “Taking fuel forward to the burner tube.”

3.5 High O2

The boiler stopped because the O2% has been over 16% for more than 10 minutes while the boiler output has been over 80%

Causes:

- No more fuel in the fuel store
- A bridge has been built in the fuel store
- The fire has extinguished in the burner tube
- There is leaking false air into the boiler

NOTE: High O2 is only active when the boiler is in running mode

If you still see glows in the burner tube, press »START« and the boiler will restart as described in Section 2.4, soft start. In case the fire should be extinguished, the fire must be started again as described in section 2.2 “Taking fuel forward to the burner tube.”

3.6 Lambda offs.

If the error “Lambda offs.” appears when calibrating the lambda probe, it is because the measured O2% deviates more than ± 4% from 21% which is the amount of oxygen (O2) in clean air. The lambda probe can only be calibrated in the area from 17 – 25%. Try the function “Reset all” before calibrating.

Causes:

- The probe is not exposed to absolutely clean atmospheric air
- The probe has to be cleaned (use a wire brush gently)
- The probe is defect

3.7 Power cut

In case of power cut, the boiler will automatically restart, though depending upon length of the power cut.
Should the boiler temperature have dropped more than 15ºC during power cut, the boiler will not restart, but display the error “Low temp.”, see section 3.3 Low temp.

3.8 Sprinkler system

Should the fuel back-burn into the auger channel and the temperature exceed 95 ºC the sprinkler might start and spray water under pressure down into the auger channel and put the fire out (The boiler will continue as normal, if possible.)

Causes:

- Fuel store lid in not tight (Install a new gasket) ,
- The fuel store lid was left open (This lid must never be open during use).
- Too much draft in chimney (Draft stabiliser might be installed into chimney)

If the sprinkler system has been activated you must check that the sprinkler valve is closing tight again. Dismount the hose on the sprinkler valve and check whether it drips.

Please contact your installer, should you continuously have burn-back problems

Section 4- Maintenance

Regular maintenance is essential for effective problem free use of the boiler and also for the life expectation of the boiler. The following is recommended.

4.1 Maintenance intervals

The following intervals should be seen as guidelines, as they are very much depending on the fuel type used and the conditions of use for this boiler

Daily (check)
- Does the boiler run as expected
- Check and if necessary remove slag from the burner tube (this might mainly be necessary when heating by grains)

Weekly maintenance
- Check that the water level is OK, see manometer
- Check that the water returning to boiler is at least 60 ºC
- Clean the heat exchanger using the brush
- Empty the combustion room for ashes

Monthly maintenance
- Check that the gasket in the fuel store is intact (is tight)
- Check that the gasket in the doors to the combustion room are OK
- Clean the side walls in the combustion room
- Check and clean the burner tube for slag (in the area close to the auger)
- Check and clean the perforations in the side of the burner tube
- If a draft stabiliser is fitted, check it for “free” movement and clean it if necessary.

Yearly maintenance
- The flue box should be totally cleaned out for ashes
- Check that the flue pipes from boiler to chimney are not blocked
- Combustion fan should be cleaned at the fan wheel.
- Dismount the ring in the burner tube and drill all clinker found in the perforations away.
- The bolts holding the burner tube and auger together should be fastened.
- Check the sprinkler valve and check afterwards, that it is tight
- The chain at the rear of the stoker should be oiled and tightened to 15º on the scale.
- The bearing behind the big chain wheel should be greased by means of a grease pump.

Important

Please always remember to cut the power to the boiler during any form of maintenance or repair work!

It is recommended to have the boiler checked once a year by a Twin Heat professional!

4.2 Maintenance of boiler

The combustion room and the flue tubes are cleaned through the doors in the front of the boiler. Clean the tubes by pulling brush forth and back in each tube.

Loose sod and ashes are pushed into the flue box at the rear side of the boiler.
Flue box should be emptied and swiped 1 – 2 a year, depending on fuel type.

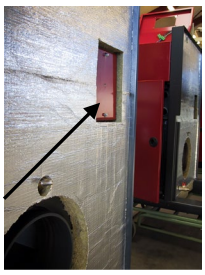

Mudhole for fluebox

Boiler shown with dismounted cleaning door to flue tubes

The combustion room should be cleaned when a app. 2 mm thick layer is seen, as this layer insulates and prevents the water from getting full use of heat produced.
As a guideline please control the flue temperature thermometer. If the flue temperature has increased some 30 – 40 ºC over the temperature in a newly cleaned boiler, you should clean the combustion room walls. The temperature should be read a the same load %, as it increased with boiler load.

In case the plant is stopped for a longer period, e. g. over summer, it should be totally cleaned out for ashes. It is important to leave the combustion room door slightly open to prevent condensation and corrosion.

4.3 Maintenance of burner tube

The burner tube must be cleaned if a heavy coating is noted. It is very important, that the holes, which let combustion air into the burner tube are not blocked.

The cleaning of the burner tube is made by dismounting the ring in the burner tube by unscrew the frontflange while pulled out from the boiler compartment. Use a drill to gently refresh the perforations in a way that removes any clinker which may be found.
The burner tube have 42 pcs. Ø4mm holes.
If the holes are blocked, the combustion of the fuel may be incomplete! (see fig. 5)

The auger must be able to deliver the fuel into the burner tube. Heavy coating can block the fuel and finally cause a stop.

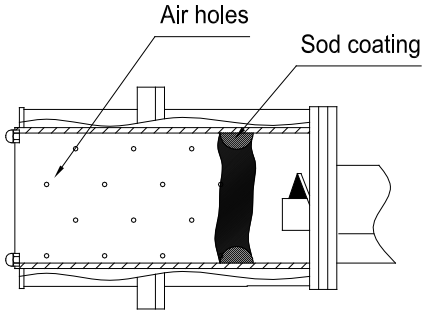

Fig. 5- Burner tube

4.4 maintenance of fuel store

The grey cover at the rear of the stoker is removed. The chains must be greased by oil or grease. The chain must be tightened to 15 º (shown on the tightening devise). All the chain wheels are tightened

The bearing behind the bigger chain wheel is greased by a grease pump

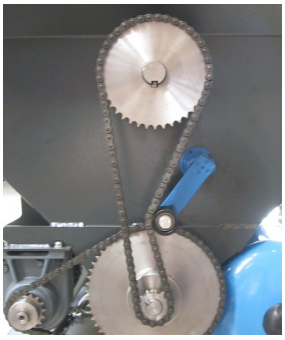

Chain tightener

The sprinkler valve is controlled by unscrewing the hose, where after the red hut under the valve is activated. It is very important to secure that the valve is tight after the test, as you otherwise will have water dripping into the fuel. Should the valve not be tight, you must open it and clean the contact surface and assemble it again.

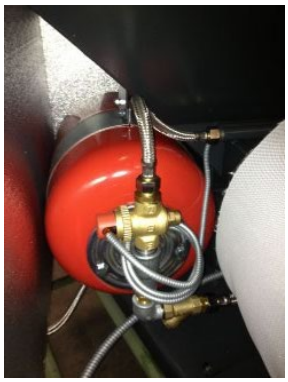

Sprinkler valve

Section 5- Various types of fuel

5.1 Wood pellets

Wood pellets are made by pressing fine grinded wood through a matrices under high pressure adding steam. Pellets are produced in diameters between 3 and 25 mm. If they are over 25 mm, they are called briquettes. The pellets are cooled down and put through sieves to remove dust.
According to (*Danish*) notice no 638 regarding biomass you can only use clean wood such as sawdust, chips and grinding dust. Any added binding material may not change the character of the wood pellets from being biomass combustible. The basic material may contain maximum 1 % glue of approved types, but neither paint, plastic, metal, impregnating material or the like. Pellets containing such material are defined as waste and should NOT be used in any furnaces

How do I get good wood pellets?

The supplier must be able to issue a declaration, stating that the pellets are made of clean wood without any prohibited additives. Further the following should be checked.

- The pellets must smell as fresh wood.
- The smell coming through the combustion must be as from clean wood.
- The colour must be as wood without any traces of paint or the like.
- The specific weight must be OK.
- There should not be any kind of additives in the pellets.
- The amount of saw dust and the like should be very low.

How to control these preconditions?

Smell
Put a few handfuls of pellets into a plastic bag and smell the content. If the pellets smells from wood, they are OK. But remember, that some pellets are made of beech or oak which smells different than pine. The smell alone cannot define a good pellet.

Smell during combustion.
The smell from the flues must be as from wood combustion. If the flues smells differently, you should carefully check the pellets.

The colour
The pellets must be homogeneous and have a wood like colour. The colour can vary depending on the kind of wood used or if smaller amounts of finely grinded bark is mixed into the pellets (this is permissible). The exterior must be dark brown (caused by the heat during production). No particles, not looking like wood, should be visible, as this indicates pollution from paint, plastic, carpet or similar items.

The specific weight
The specific weight for wood pellets depends partly on how hard they were pressed, partly on moisture content (typically round 6 – 8 %) Due to the amount of air between pellets the specific weight is round 0,6 to 0,7 kg pr litre. But if you put a good pellet into a glass of water it should sink like a stone (due to the compression of the material.

Additives
If the pellets are produced without any binding materials, they will easily dissolve in water, when immersed. Try to put a few pellets into a glass of water. If they dissolve within a few minutes, the risk of unwanted binding material and the like is very low.

Dust
The content of dust between the pellets should be very low, as dust can be a real problem. It prevents the pellets from moving freely and ads to the risk of building bridges in the fuel store or in the auger. Good, clean pellets easily runs down into the auger, where as dust often remains in the lower part of a silo or the fuel store.
The dust originates from the production process, from the transport or from being blown into a silo. The pellets are considered to be OK, if the amount of dust is below 8 % at delivery. As dust is not homogeneous distributed between the pellets, it may be hard to check this figure, but you should use your best judgement to distinguish between “good pellets” and “not good pellets”.

5.2 Wood chips

In general Wood chips is a good fuel, but the size of the chips and the water content is of immense importance. The best wood chip is made from hardwood, which has been dried for 2 – 3 years
The chips should be maximum 2 x 2 x 1 cm, but some few parts may be larger. If the chips in general is too rough (too many large parts) you will increase the rubbing off on the auger and auger channel considerable, as the auger has to squeeze the material through the channel.
In other words: relatively rough chips increases the wear and reduces the life expectation of the equipment.

If you compare wood pellets with app. 6 % water content against wood chips of fresh hardwood (with app 50 % water content) you half the heating value - only due to the increased water content. Therefore always aim at so low a water content as possible – **and always below 30 %**

Wood chips from coniferous tree has app. the same heating value as hardwood, but has typically a higher bark content and often also contains sand, which burns into slag. At the same time you will often see more long, thin pieces of branches in such chips, which further complicates the handling of such chips – **and once again always below 30 % water content**

Wood chips has a tendency to building bridges in the fuel store, hence it is recommendable to connect the stirrer.

Should the water content in the chips used be above 30 – 35 %, you might have to set the controller to “Manual operation” (see section 1.5, O2 regulation ore manual operation)

5.3 Machine / industrial chips

Machine chips are made from waste wood from furniture production or the like. The size of such chips vary from 2 – 3 cm up to 8 – 10 cm, and the thickness round 2- 10 mm. Only very seldom would you see bark in this kind of chips. The water content will be round 10 % and they have a high heating value.
Machine chips have a tendency to create bridges in the fuel store, hence it is often an advantage to connect the stirrer.

5.4 Grains

Please note that grain should not be used in Smoke Control Areas!

If you are heating by burning grains (e.g. rye, wheat or barley), the water content of the fuel should always be under 15-16%.

One cannot for sure say, that one sort of grains is better than another, as the heating value depends on the year the grain was grown (much rain / little rain and more) and of the type of soil, on which it was grown.
Further you should anticipate, that grains has a tendency to create slag in the burner tube, e.g. the ashes gets so hot, that they create slag in the lower part of the burner tube.
This can be remedied by adding 1 – 2 kg of feed chalk (calcium carbonate) on top of the grains in a filled fuel store. The grains and the chalk will by it self be mixed. Further the risk of slag can be reduced by mixing 33 % wood pellets into the grains

Should there be a layer of slag in the burner tube it must manually be removed by using a fire hook.

PLEASE NOTE:

Requirements when heating with grains: ***High flue gas temperature min. 180°C***
High boiler output min. 50%
High boiler temperature min. 80°C

Section 6- Technical information

6.1 Cpi 12

		Approved fuel	
		Pellets	Chips
Boiler class acc. to EN303-5, 2012	-	5	4
Nominal load	kW	10,7	9,8
Load sphere	kW	3,1 – 10,7	2,8 – 9,8
Capacity of fuel store	litre	350	300
Combustion period by nominal load	hours	90	15/40[1]
Flue temperature by nominal load	°C		117
Flue temperature by minimum load	°C		76
Flue gas amount by nominal load	kg/sec.	24,1	26,6
Flue gas amount by minimum load	kg/sec.	10,5	11,9
Power consumption by nominal load	W	55	79
Power consumption by minimum load	W	18	24
Power consumption by standby (pause)	W	5,7	5,7
Noise emissions	dB		

Draft necessary:	10 Pa
Diameter of flue spigot:	Ø 129 mm
Amount of water in boiler:	74 litre
Water resistance in boiler by temp. difference 10°C, flow 0,5m³/h	13 mbar
Water resistance in boiler by temp. difference 20°C, flow 1,0m³/h	12 mbar
Adjustment span for boiler thermostat:	70 – 85°C
Minimum temperature of water returning to boiler:	60°C
Size of fuel store lid:	510 x 640 mm.
Electrical supply:	See data plate on boiler

Fuel specification:

- Pellets (C1) size 6-20mm with water contents ≤ 10%
- Chips (E1) max. lenght 50mm and max. cross section at 3cm², equal to max. Ø20mm or square 18x18mm. Water contents ≤ 25%. (If the water contents is higher then 25%, the boiler will not be able to provide the rated output

The cpi12 boiler is operating non-condensing with combustion fan and vacuum at the flue spigot.

[1] Forbrændingsperioden ved flis er afhængig af vægtfylden. 0,15 / 0,35

7.1 Parts list burner tube

Parts no.	Pcs.	Description
	1	Combustion ring
	1	Front flange
	1	Gasket in front of burner nearest boiler
	1	Washer flange behind gasket in front of burner
0103011-00	1	Gasket between burner and fuel store
2100051-00	1	Gasket between burner and boiler
6200308-00	4	Top nut
4001108-00	1	Fan
4001109-00	1	Capacitor for fan

7.2 Parts list sprinkler

Parts no.	Pcs.	Description
6000435-00	1	Pressure tank
6000450-00	1	Sprinkler valve
6000410-00	1	Contra valve
6000460-00	1	Dirt strainer
6000820-00	1	Hose, steel armed
6000830-00	1	Hose, steel armed

7.3 Parts list fuel store

Parts no.	Pcs.	Description	Technical data
7000100-00	1	Chain wheel	Z16 – Ø20
7000103-00	1	Chain link	
7000102-00	1	Chain for auger	73 links
7000130-00	1	Chain tightener, external	
7000135-00	1	Roll for chain tightener	
7000105-00	1	Chain wheel	Z13 Ø 25
7000106-00	1	Flange bearing for auger	Ø30
7000108-00	1	Chain wheel	Z57 – Ø30
7000109-00	1	Chain for stirrer	84 links
7000104-00	1	Cranket chain link	
7000110-00	1	Chain wheel	Z40 – Ø35
7000112-00	1	Flange bearing for stirrer	Ø35
4000610-00	1	Electrical switch for lid	
1005350-00	1	Bronze bearing	
1102000-00	1	Auger	
1005525-00	1	Stirrer wing – short model	
1005520-00	1	Stirrer wing	
1101038-00	1	Stirrer plate	
1101020-00	1	Stirrer axle	
7000121-00	1	Flange bearing for stirrer	Ø25
1100052-00	1	Gasket for lid	
4000240-00	1	Gear motor	400V
5400100-00	2	Handle for lid	
5400110-00	2	Hinge for lid	
5500100-00	1	Gas spring for lid	
6000824-00	1	Hose, steel armed	340mm

7.4 Parts list boiler

Parts no.	Pcs.	Description
6001009-00	1	Cleaning brush ø 38mm
3100011-00	1	Gasket for boiler door
3100021-00	1	Gasket for cleaning door
3103000-00	1	Boiler door, complete
3103040-00	1	Insulation for boiler door
6101115-00	1	Gasket for lambda probe
4001100-00	1	Lambda probe
4001160-00	1	Over heat thermostat
3100030-00	1	Gasket for mudhole
3104020-00	1	Insulation for cleaning door
4001125-00	1	Heat sensor

7.5 - Electrical Diagram – 400V, 3 phase

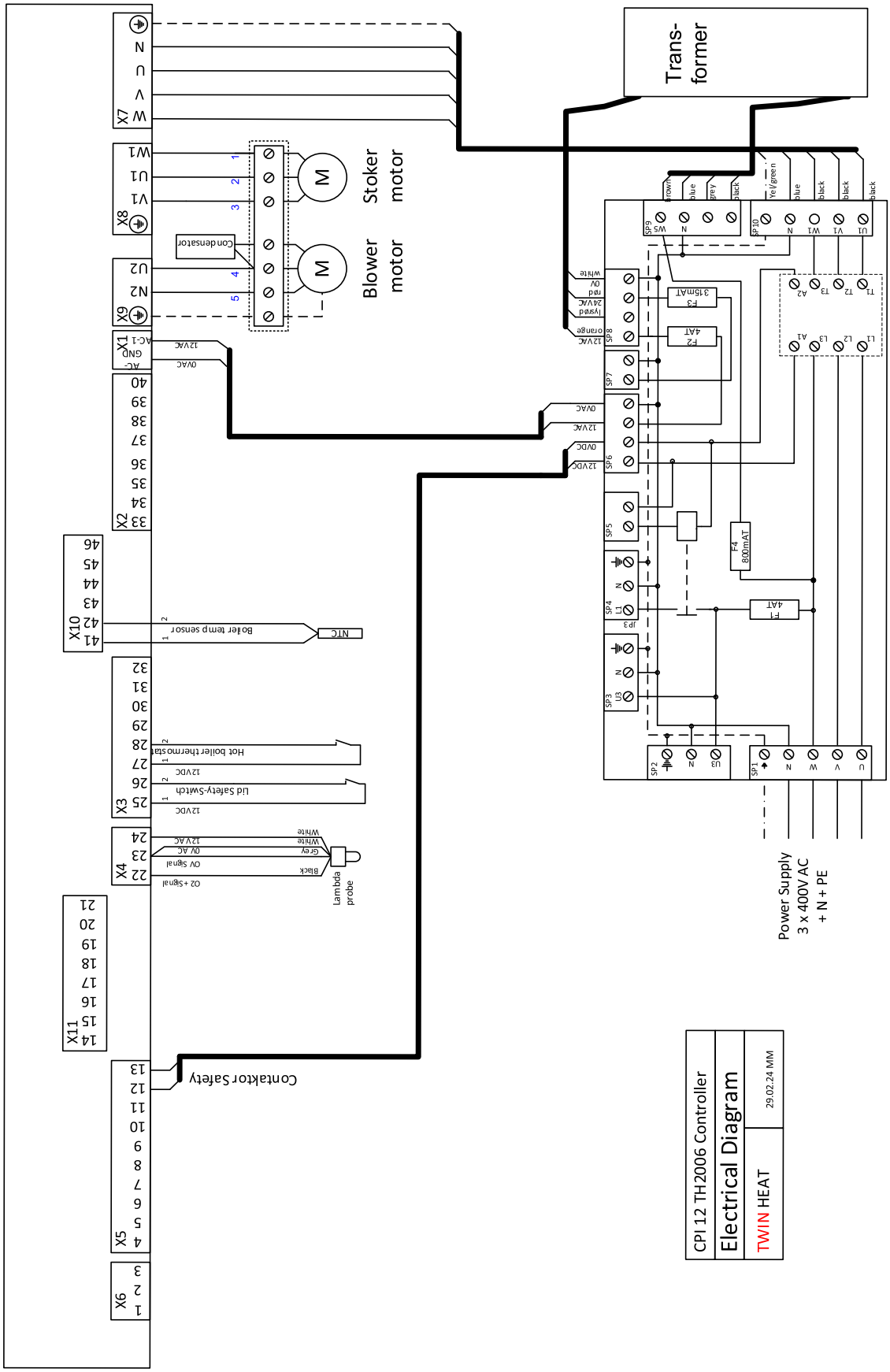

7.6 - Electrical Diagram – 230V, 1 phase

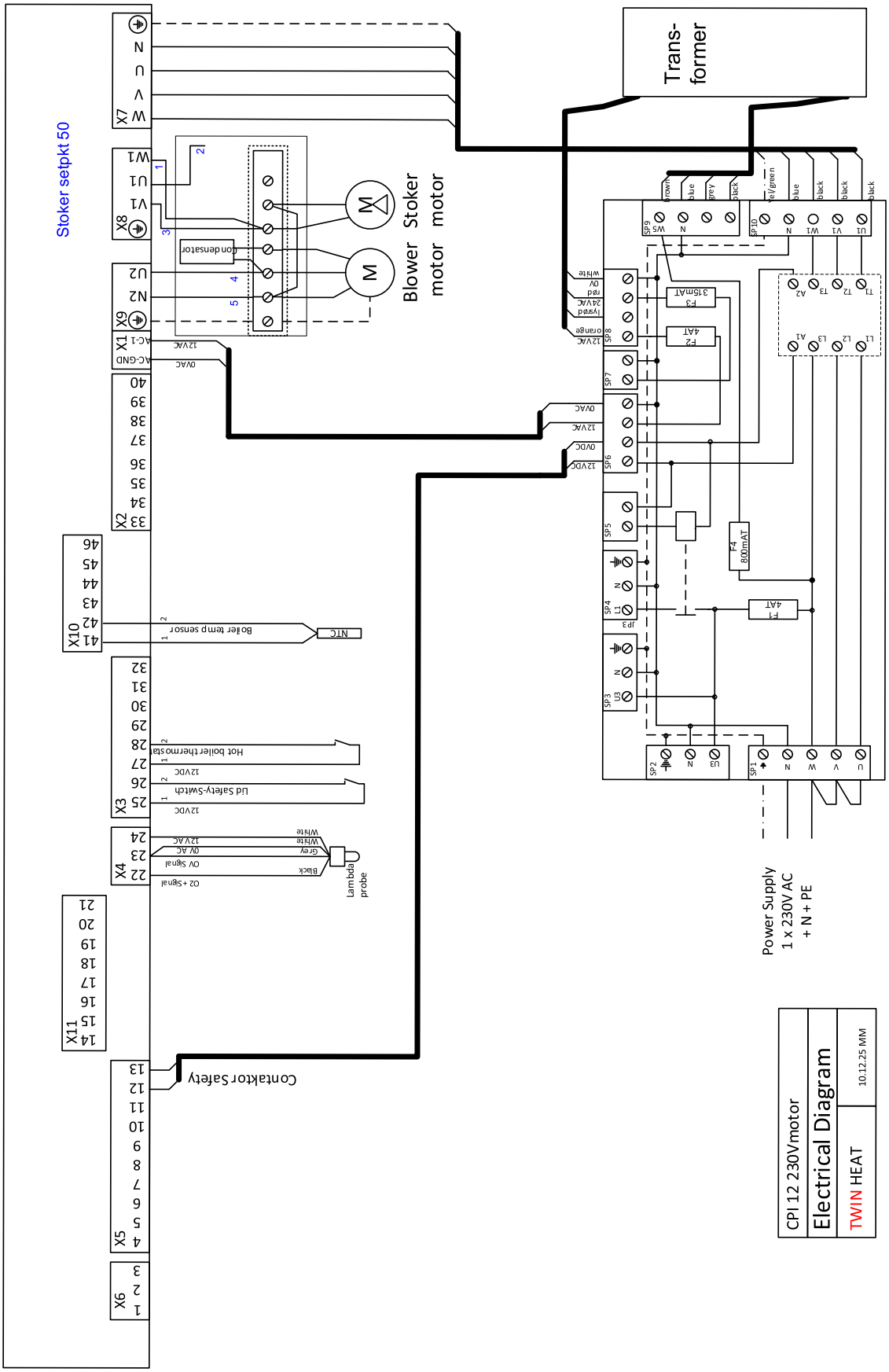

7.7 - Diagram – The placing of components

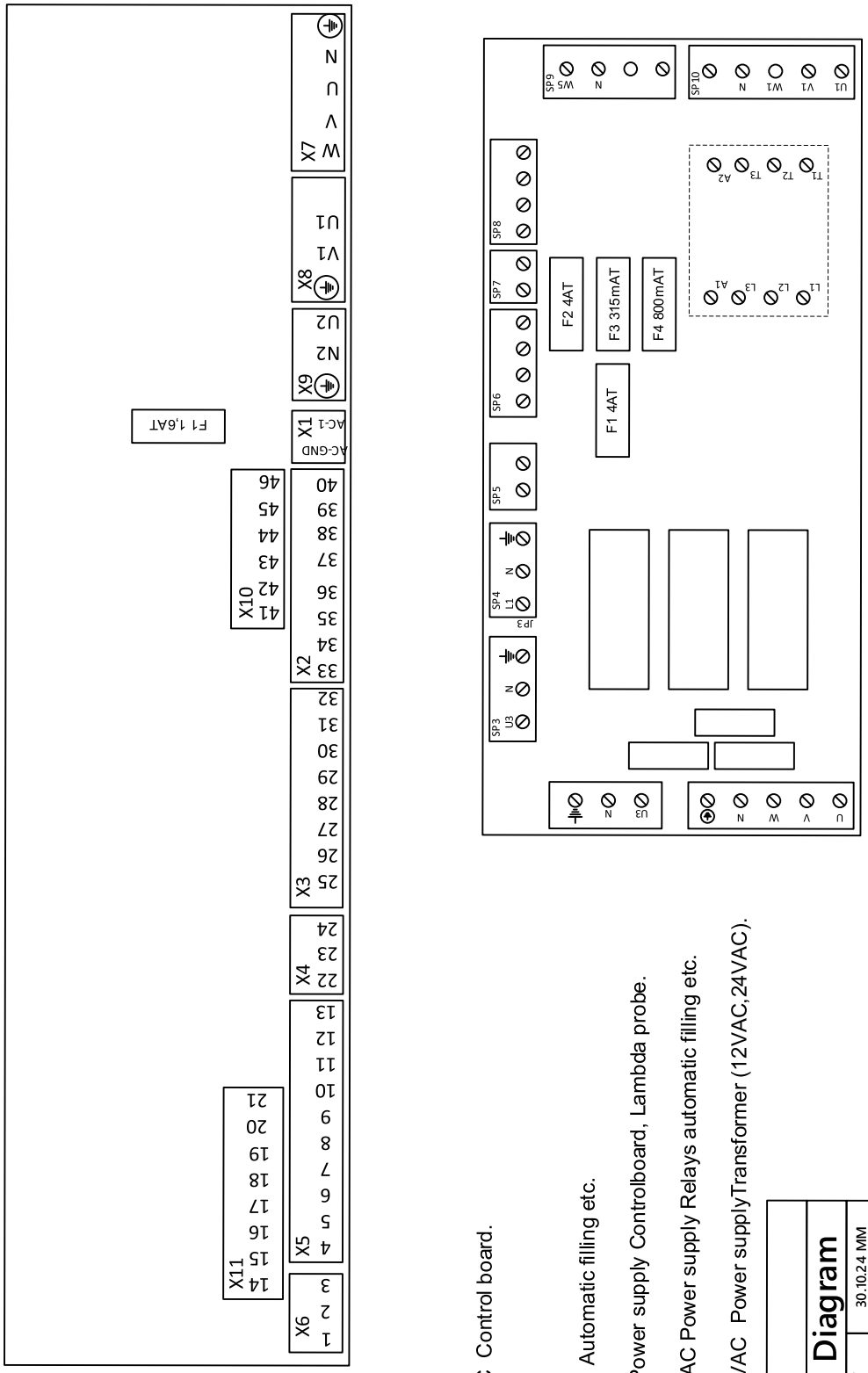

Control board:

F1 1,6AT 12VDC Control board.

Power board:

F1 4AT: 230VAC Automatic filling etc.

F2 4AT: 12VAC Power supply Controlboard, Lambda probe.

F3 315mAT: 24VAC Power supply Relays automatic filling etc.

F4 800mAT: 230VAC Power supplyTransformer (12VAC,24VAC).

Th2006	
Electrical Diagram	
TWIN HEAT	30.10.24 MM

Enclosure 1 – How to mount the chain for stirrer and stirrer wings

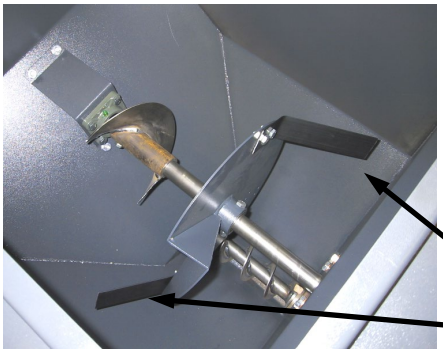

The stirrer wings included (both long and short versions) are mounted as shown on picture. The long model must be fit on the rear side of stirrer plate – towards the chain

(The wings might break, if placed wrong way)

Stirrer wing- **long model**

Stirrer wing- **short model**

The chain tightener should not be loosened, as it wrings in the rubber fixation

The chain is easiest fitted, if somebody can help you holding the chain tightener .

Do remember to cut the power – Cut power at Main Switch!!

1) Place the wrench, a big thong or the like at “arm of the chain tightener and press against the cog-wheel as shown.

2) When holding the chain tightener, you are now able to mount the chain by means of the chain connection included (shown by the arrow)

3) When the chain connection is fit, you loose the tong or wrench again

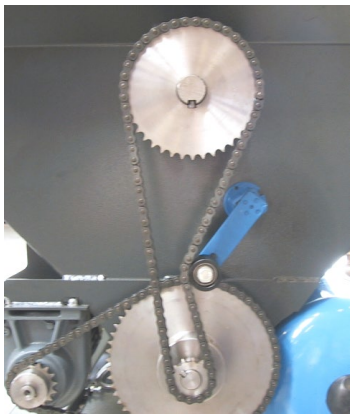

4) The chain must run as shown in this picture. Check after having finished the work, that the chain runs freely.

Enclosure 2 – accessories included

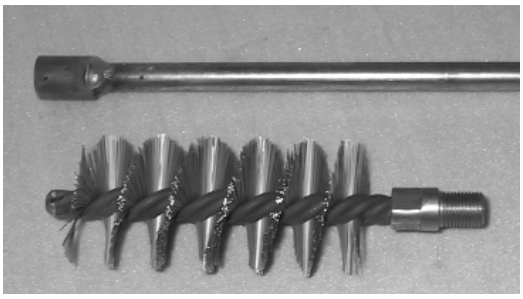

Cleaning brush Ø40 mm. and handle.

Fire hook

Stirrer wings, long and short version
Plus chain for the mounting of stirrer

EF OVERENSSTEMMELSESERKLÆRING

Undertegnede, der repræsenterer følgende fabrikant

Twinheat A/S
Nørrevangen 7, DK-9631 Gedsted

erklærer hermed at produktet

TWIN HEAT Stokerfyringsanlæg Type Cpi 12

er i overensstemmelse med bestemmelserne i følgende EF direktiv(er)

2006/42/EC	Machinery Safety Directive
2006/95/EC	Low Voltage Directive
97/23/EC	Pressure Equipment Directive
2004/108/EC	Electromagnetic Compatibility Directive

Referencer til standarder og/eller tekniske specifikationer som er anvendt til denne overensstemmelseserklæring, eller dele deraf:

Nr.	Udgave	Titel	Dele
60204-1	3.	Safety of machinery – Electrical equipment of machines - Part 1 – General requirements	Part 1
12100	2.	Safety of machinery - General principles for design	
14121-2	1.	Safety of machinery – Risk assessment Part 2	Part 2

- **andre standarder og/eller tekniske specifikationer:**

Nr.	Udgave	Titel	Dele
BR10	24-08-2011	Bygningsreglementet – Installationer – BR10	Part 8

Gedsted 28-06-2012

CEO. Søren Vasegaard