ASSEMBLY INSTRUCTIONS

Quatro silo

Version 2.0 – Dec 2012

Nørrevangen 7 • DK-9631 Gedsted • Phone +45 98645222 • Fax. +45 98645244
Mail: twinheat@twinheat.dk • Web: www.twinheat.dk

This assembly instruction is intended for professionals only.

It requires two people to assemble the silo.

Unpack the silo. Remember to inspect it carefully for transport damages. Possible damages should be reported to the forwarder.

If the silo is placed outside and exposed to rain, all joints must be sealed.

Start by mounting the auger and the auger-channel at the silo base.
The auger is to be placed in the silo base. Remember to place the bronze bearing on the auger shaft at the silo base.
Hereafter the auger channel, without the lid, can be mounted.

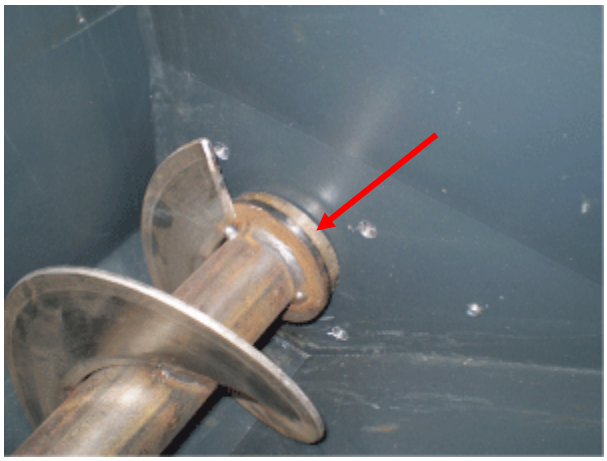

Bronze bearing on auger shaft

Mount the flange bearing, chain wheel and chain. It is important that the chain wheels are lined up so they are parallel. Tighten the chain tightener to 15 degrees (Shown at the side of the tightener)
Mount the chain guard.

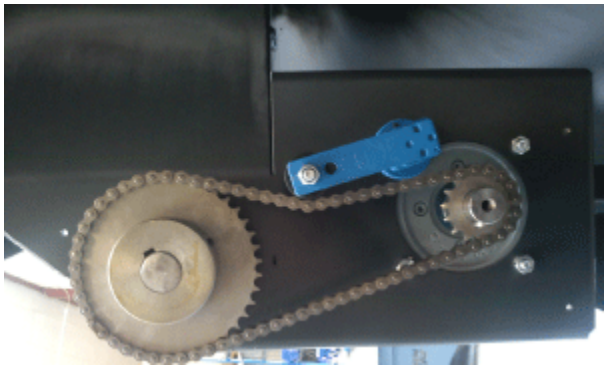

Chain connection with chain wheels, flange-bearing and chain tightener

The lock screws in the two flange bearings, in both ends of the auger, are <u>not</u> to be tightened.

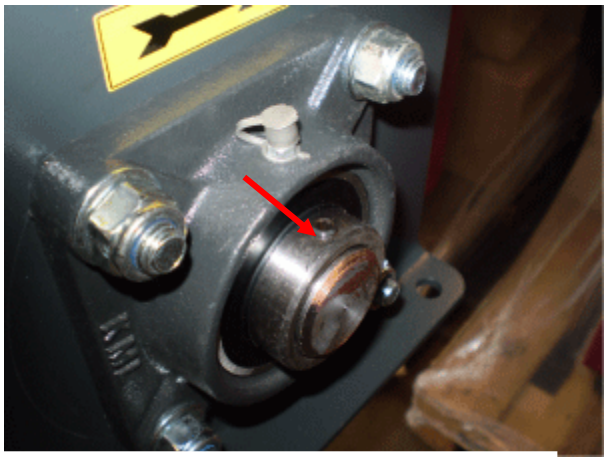

Flange bearing

Now decide at which side of the silo the lid is to be hinged and at which side the inspection glass shall be.

Mount the side plates on the silo base with the supplied bolts and nuts. The short M6 bolts are used to assembly the vertical joints and the lid. The long M6 bolts are used to assembly all the horizontal joints
Start by mounting 4 plates, one at each side of the silo, and tighten them. The next 1-3 sections, depending on silo size, are mounted similarly. Note that the bolts which hold the brackets for the hoist are to be mounted later. (See next page)

Silo base with the first section and one plate of the second section mounted

Assemble the lid consisting of the four triangular plates and the square reinforcement plate, which is to be placed inside the lid. Do not tighten the bolts before they all are in place. Start by placing the square reinforcement plate on a stack of pallets or the like.

Lid partly assembled

Notice that the plate which is bent is lying on top of the adjoining.
The little flap at the tip of the corner must be bent so it fits inside

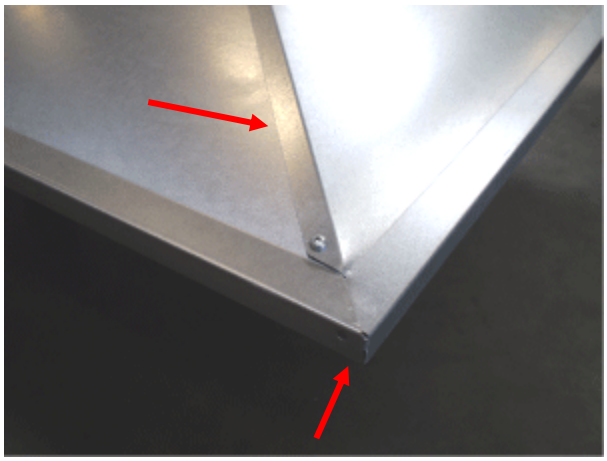

Corner of the lid

Mount the pyramid shaped reinforcement plate inside the lid and mount the eye bolt from the outside of the lid. The hole in the lid for the eye bolt must be drilled up to 13mm before mounting the eye bolt.

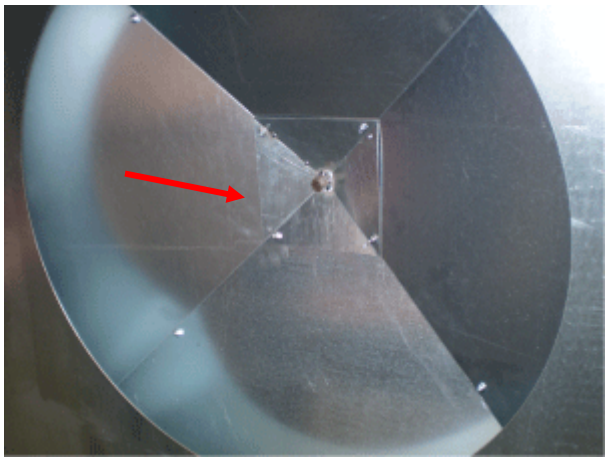

Pyramid shaped reinforcement plate mounted inside the lid

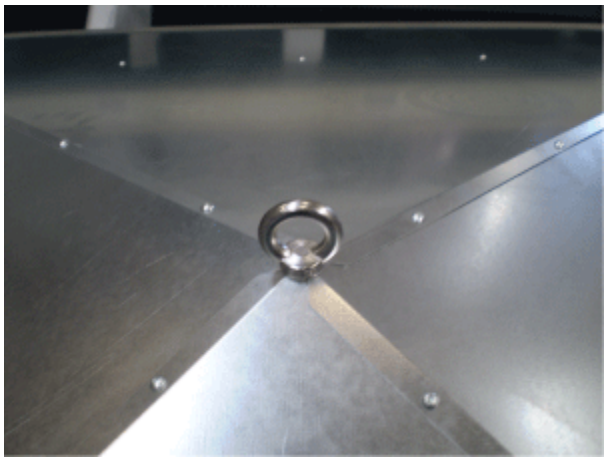

Eye bolt mounted from the outside of the lid

Place the lid on the silo and mount the bolts holding the lid to the hinge.

Now the hoist can be mounted at the side of the silo.
Hoist for silos with 2 sections are attached with 2 brackets and silos with 3-4 sections are attached with 3 brackets.

Mount the lower bracket for the hoist at the same side as the hinge for the lid. The bracket must be fastened together with silo base/side plate.

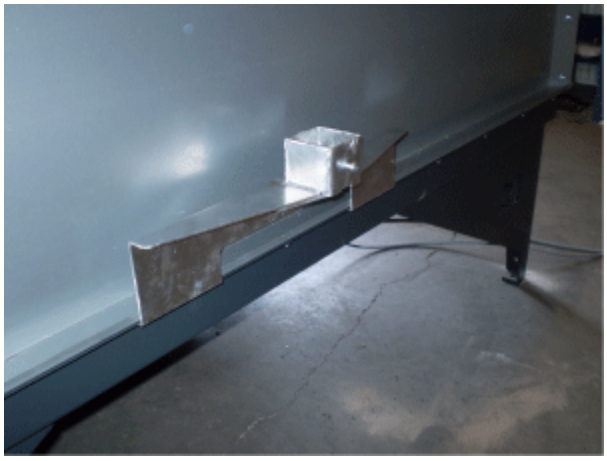

Lower bracket mounted in the centre of the silo side

Place the pillar, with the one or two remaining brackets on it, in the lower bracket and tighten the bolt in the bracket One bracket must be mounted in the top together with the lower part of the hinge and by 3-4 section silos the other in the section-assembly just below.

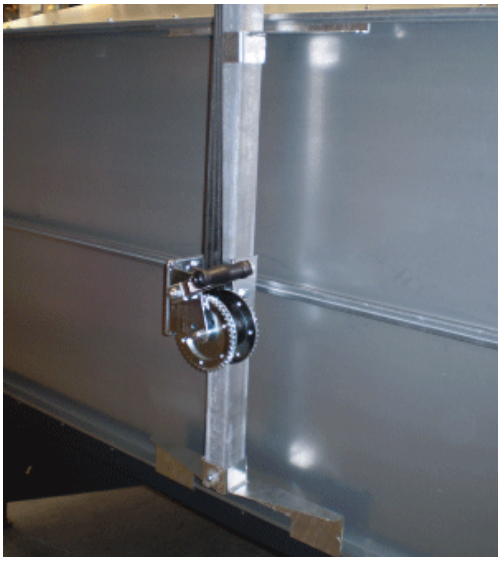

Pillar placed in the lower bracket

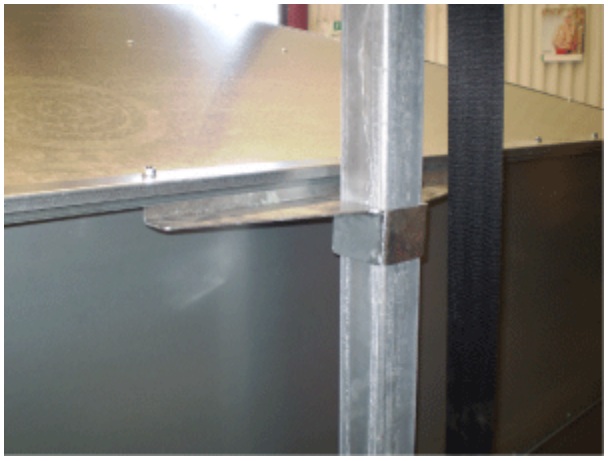

Top bracket mounted together with bolts for lower part of hinge

Top of the pillar with hook fixed in the eye bolt.

Drill holes for the rubber strap brackets and mount them.

Mount the electrical switch on top of the lid at the auger channel. If the fuel in the auger piles up, the pressure will force the lid to open slightly hereby the electrical switch will be activated and stop the silo and boiler.

How to connect auger to rotating valve on boiler:
The auger is connected to the boiler by means of the flexible hose.
Mount the hose unions in both ends of the flexible hose with the hose clamps. If necessary, shorten the hose up. Mount the hose between auger and rotating valve with the quick couplings.

The two stay tighteners are to be mounted between the auger and the rotating valve. They are to prevent the auger from twisting, when it is running.

Stay tighteners mounted between auger and rotating valve on boiler

The electrical installation must be made by an authorised electrician!

Electrical diagram 230V single phase connection

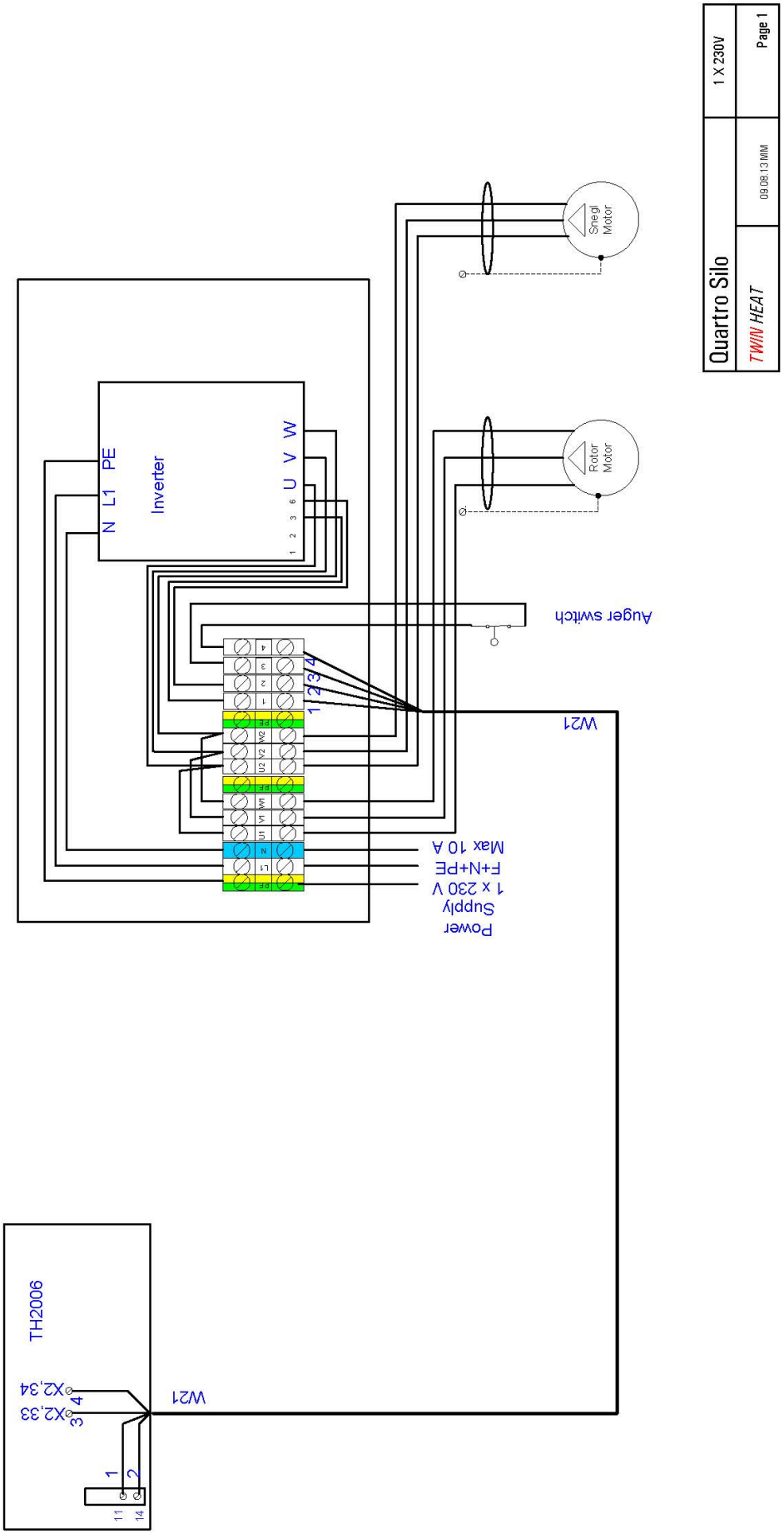
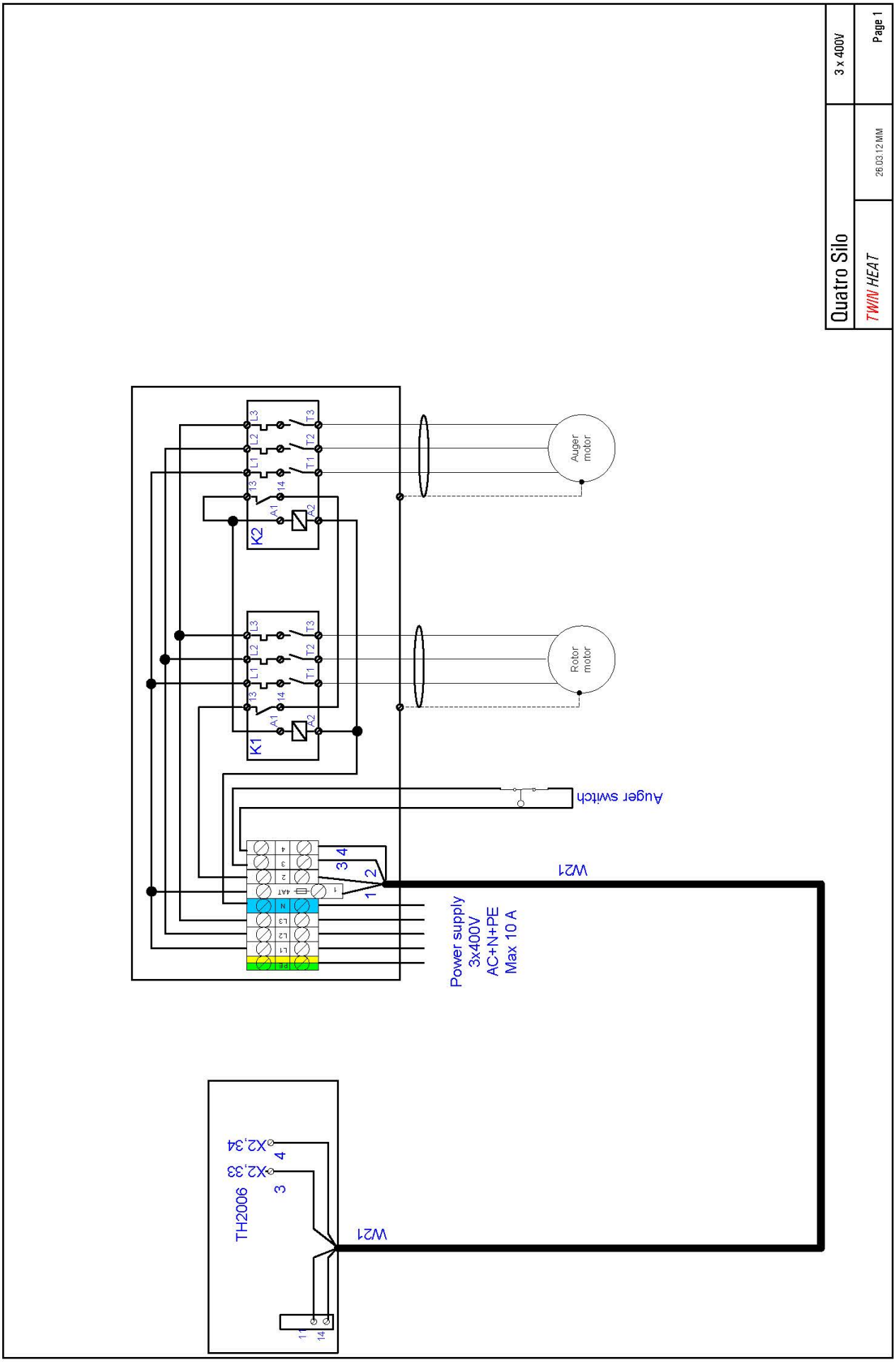
Electrical diagram 3x400V connection